POKHARA UNIVERSITY

Level: Bachelor
Programme: BE
Course: Basic Engineering Drawing

Semester: Spring

Year : 2025
Full Marks : 100
Pass Marks : 45
Time : 3 hrs.

Candidates are required to give their answers in their own words as far as practicable.

The figures in the margin indicate full marks.

Attempt all the questions.

1. Draw a locus of a curve formed by rolling a circular object of diameter 35 mm without slipping for 1.5 revolutions along the straight line. 20

2. Draw the complete orthographic views of the given object (Figure-1). Assume suitable data if necessary. 35

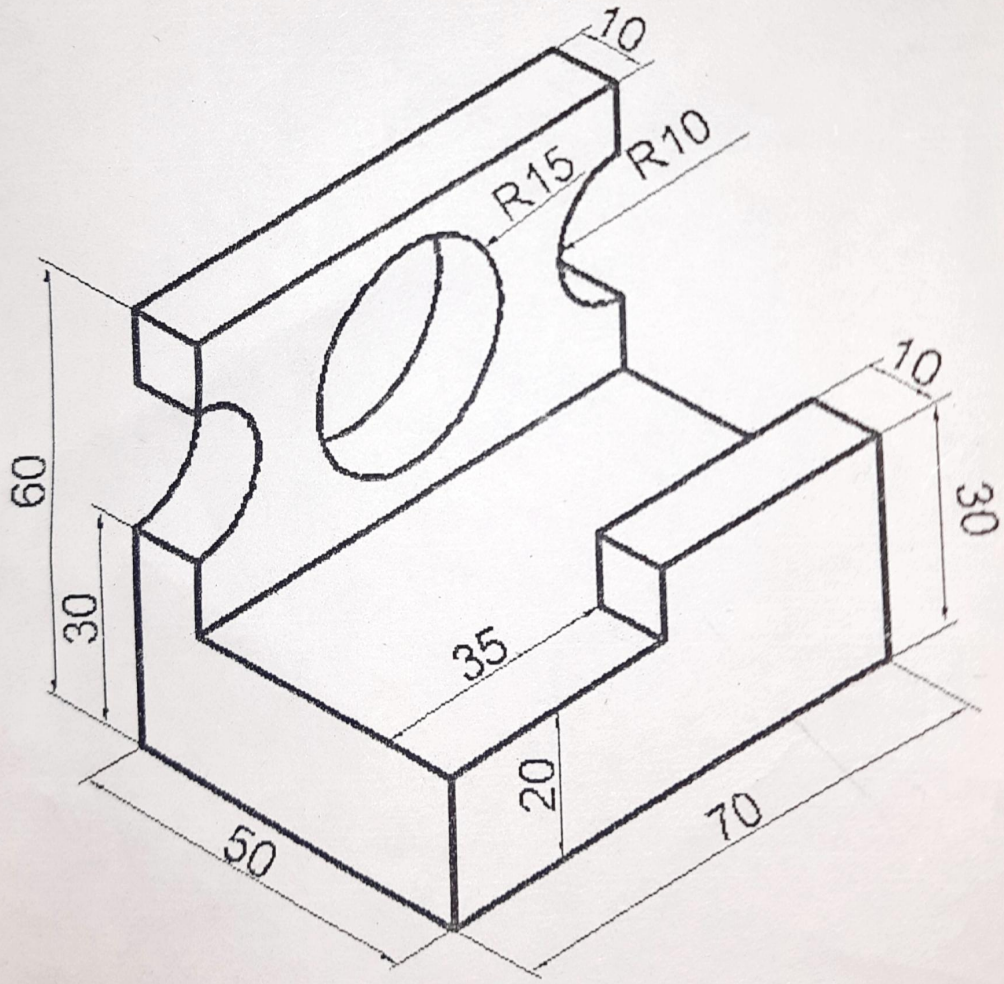

(Figure-1)

3. Redraw the following figure and find the true shape and lateral surface development. 15

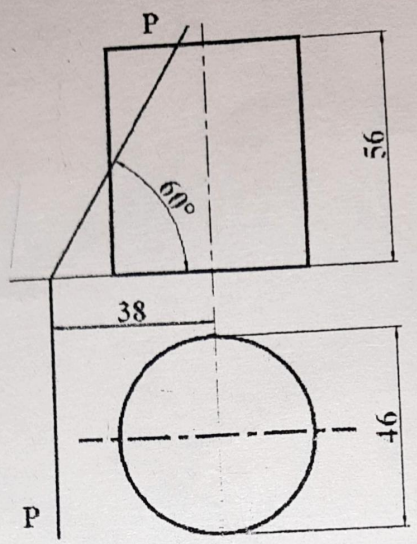

4. Create oblique drawing from given multi-view drawing. 20

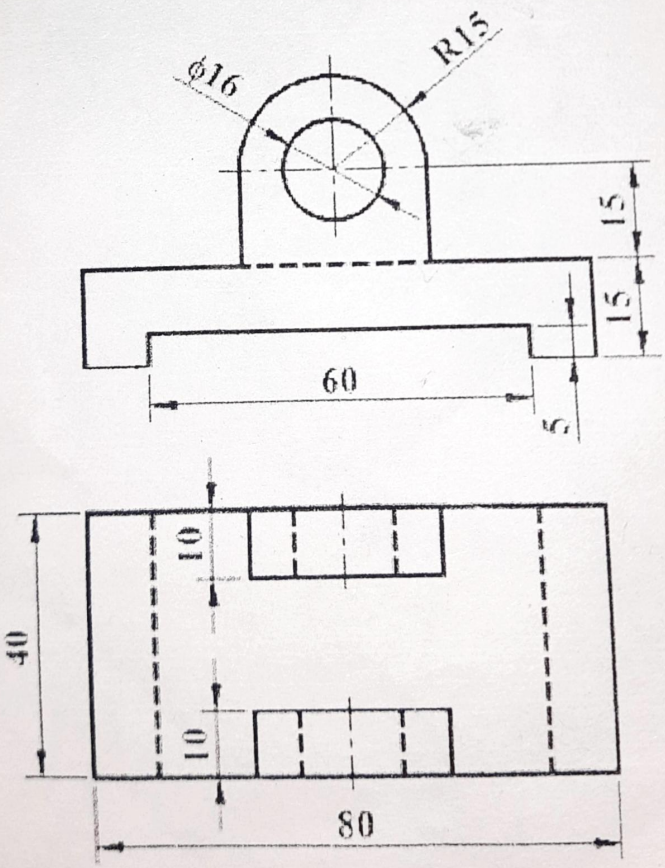

OR

Draw the Parallel perspective projection from the given orthographic views.

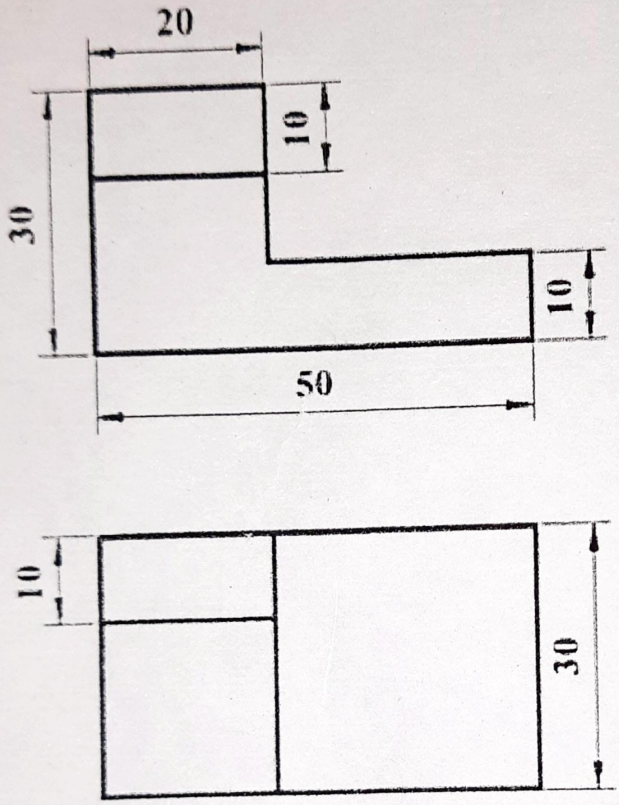

5. Draw the symbol of the following objects. (**Any ten**) 10

a) Coil
b) Switch
c) Voltmeter
d) Ac-generator
e) Battery
f) Fillet
g) Dimension
h) Ellipse
i) Hatch
j) Offset
k) Chamfer
l) Fuse